JOCAM'S STALLS-TACK ORGANIZERS-ACCESSORIES

WWW.JOCAMS.COM **1-866-422-1077**

FOLD DOWN SLIDING DOOR ASSEMBLY:

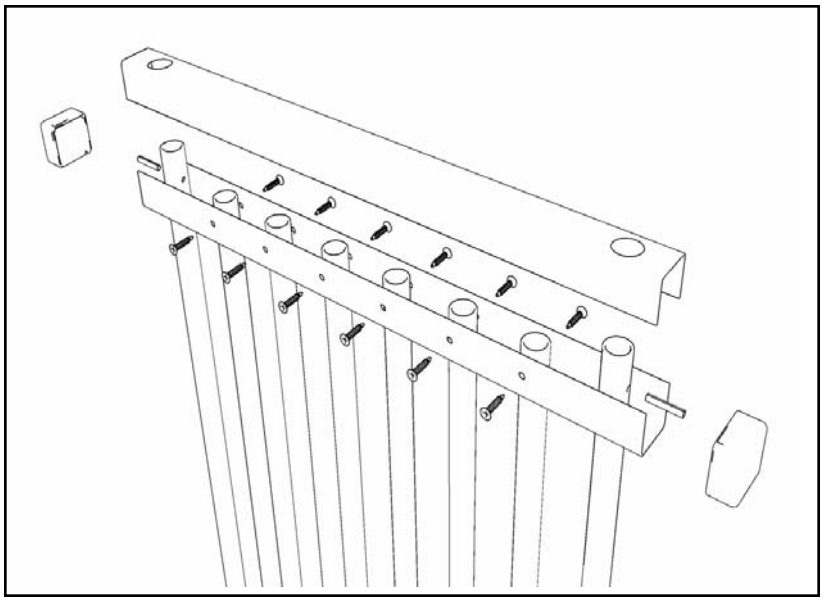

Top of Fold Down

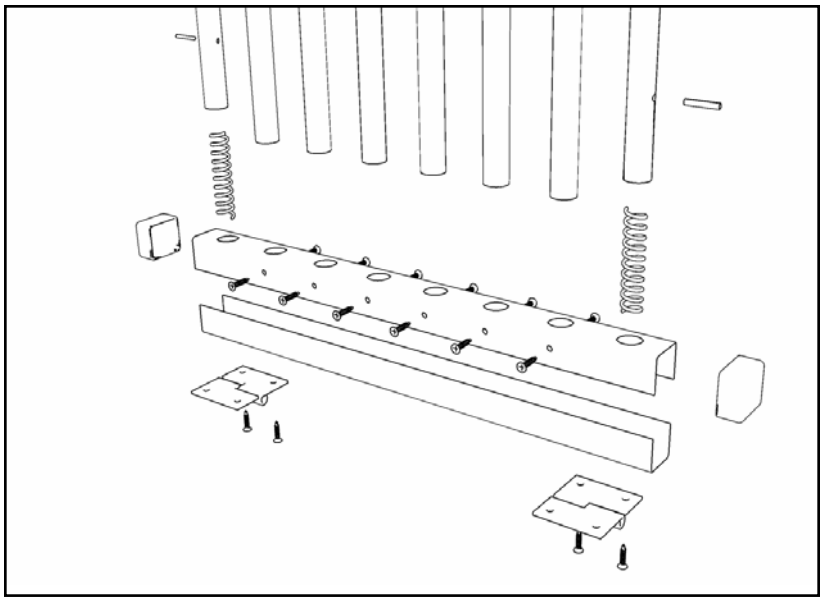

Bottom of Fold Down

1. While following the instructions for the sliding door assembly, when inserting grill bars during step 4, insert 5 36” bars on each side of the door.
2. Finish the sliding door assembly instructions.
3. Lay the fold down components on a flat surface as shown, ensuring that the 2 pre-drilled grill bars are on each end
4. Insert the smaller grill channels into the wider grill channels as shown and fasten.
4. Insert the 34 1/4” grill bars into the top channel and fasten. Do not fasten the 2 pre-drilled bars to the top channel.
5. Insert 2 roll pins into each of the pre-drilled bars.
6. Insert 2 springs into the bottom of the 2 pre-drilled bars.
7. Fasten the bottom channel tightly to the bottom of the grill bars.
8. Fasten 2 hinges to the bottom channel.
9. Set inside finished door assembly, so that the spring loaded bars go into the top door channel.
10. Fasten the hinges to the bottom door channel.
11. Pull down on spring loaded bars to open.